Triangle/MultiAngle System 10-45°

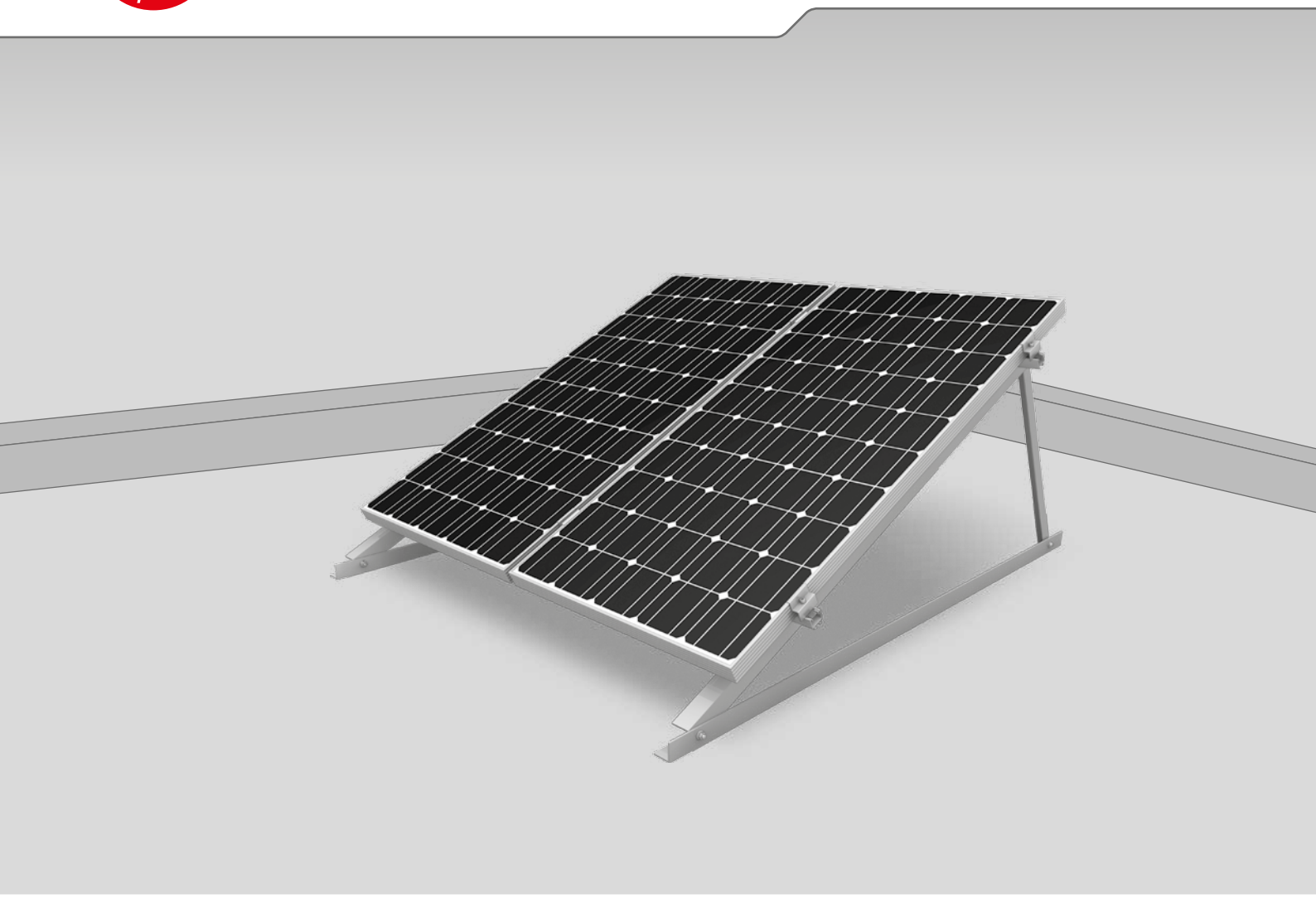

- Individually customisable elevation angle
- Universal module orientation
- High flexibility and customised solutions

TRIANGLE / MULTIANGLE SYSTEM COMPONENTS

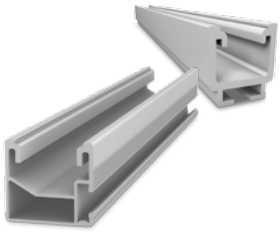

Mounting rails
- Triangle: SolidRail
- MultiAngle: SingleRail

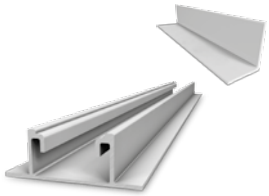

Base assembly
- Triangle: L-Profile
- MultiAngle: SpeedRail or L-Profile

Module orientation
- Triangle: Landscape mounting with AddOn
- MultiAngle: Portrait mounting, 2 heights for landscape mounting (clamps at corners or with AddOn)

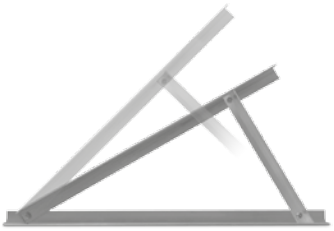

Elevation
- Triangle: Available with 10 - 45°
- MultiAngle: Individually customisable, 10 - 45°

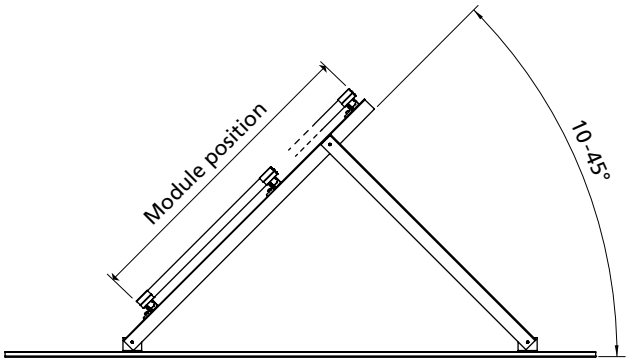

Module landscape

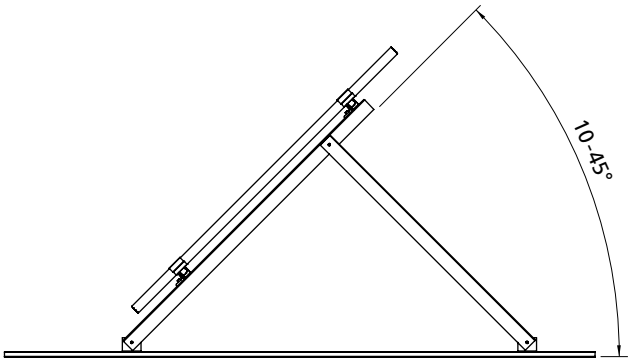

Module portrait

TECHNICAL DATA

	Triangle / MultiAngle
Scope of application	Flat roofs, fields, or ground
Fastening type/roof fixture	Fastening or ballasting
Technical specifications	Thermal separation after max. 24.4 m
Inclination angle	10 - 45°, factory-default, or individually adjustable with MultiAngle
Material	‣ Mounting rails, module clamps: Aluminium (EN AW-6063 T66/ EN AW-6082 T6) ‣ PE sheets ‣ Small parts: Stainless steel (1.4301) A2

Triangle/MultiAngle Infos EN V1 | 0716 · Subject to change · Product illustrations are exemplary and may differ from the original.